Rodgers Wheel Presses

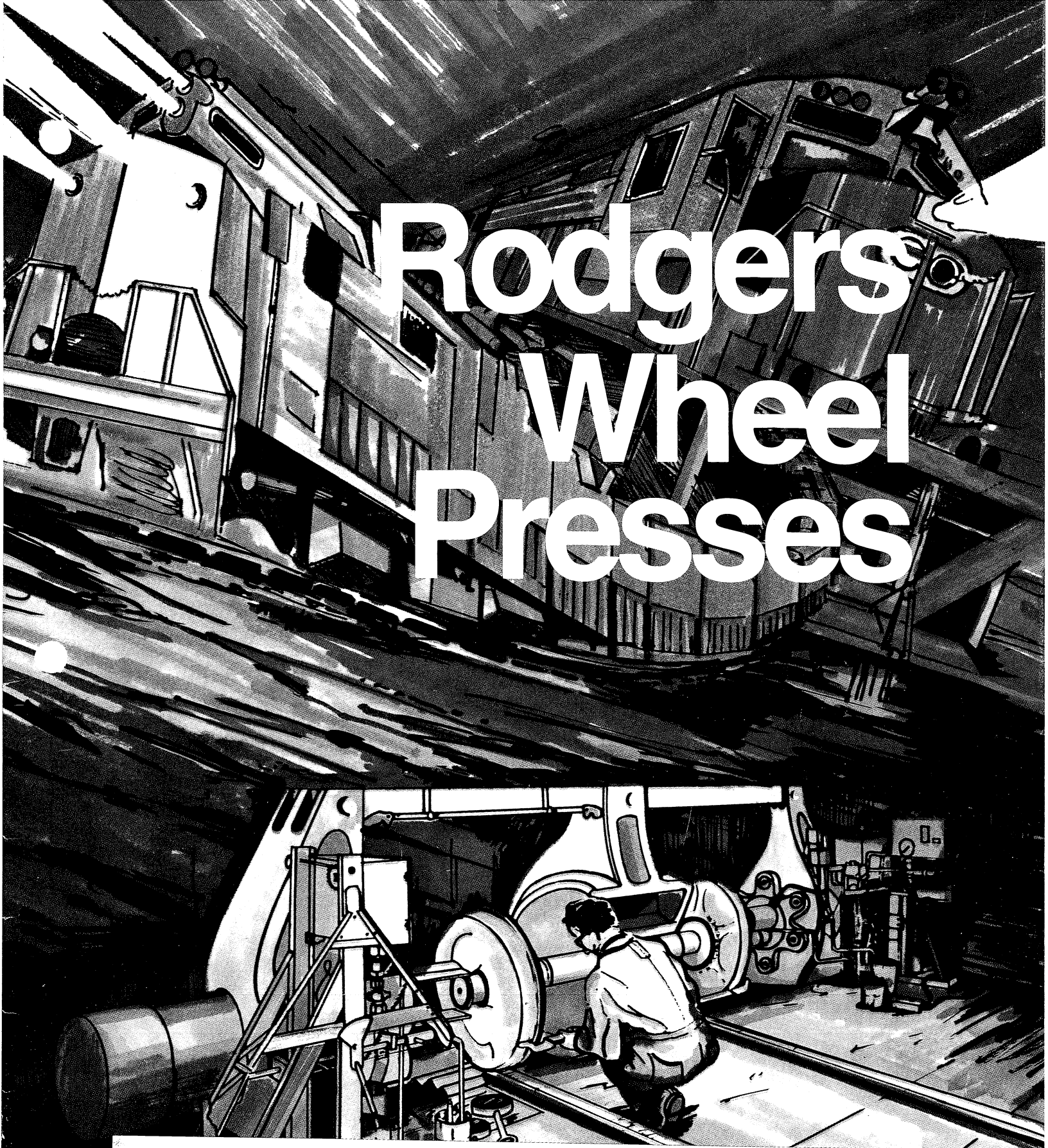

Granite Fluid Power
Granite Falls, MN 56241
Phone (320) 564-9009
Fax (320) 564-9029
www.gfpmf.com
gfpinc@kilowatt.net

Rodgers Wheel Presses...

A complete single-source supplier

When you select a wheel press, you want assurance of design features and capacity best suited to your particular operation. "Special" presses have long been standard in the Rodgers line, and wheel presses are no exception. Rest assured, with Rodgers' broad experience in the railroad field, you have the selection to meet your exact requirements. And if custom features are required, you won't find a better source.

For nearly 50 years, Rodgers has been prominent in the design, development and manufacture of hydraulic presses for all types of industrial applications. The one press manufacturer producing all hydraulic components, Rodgers produces the cylinders, axial piston pumps, pressure control valves and directional control valves, as well as all structural members. Rodgers single-source service also includes complete assembly and testing before shipment, and field supervision of final assembly.

If you are planning a modernization of existing wheel shops, or a new facility, be sure to include your Rodgers representative at an early stage. He is ready and willing to assist you in floor planning and placement of presses for best work flow. Whether new assembly or repair and maintenance of passenger, freight and diesel wheel sets of all sizes, Rodgers has the right press.

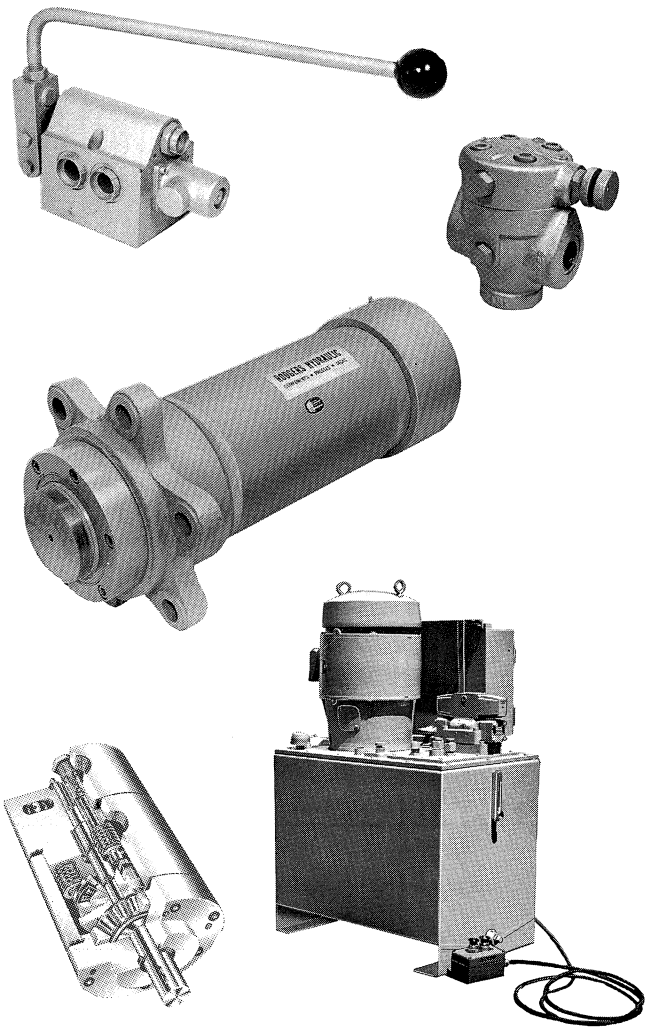

built for long life and efficiency

1. HEAD MEMBER
Cast steel, carefully heat treated to 130,000 psi tensile strength. Designed to provide full cylinder support and alignment under load without excessive weight. Joined to tension members at bearing points by large round steel keys.

2. TENSION BARS
One above and one below on 200 and 300 ton presses, two above and two below on 400 and 600 ton presses, Accurately sized cold drawn flats of AISI C1018 steel with smooth surfaces—more strength and rigidity than required for rated capacity of the presses.

3. DOUBLE-ACTING CYLINDERS
High strength spun-cast alloy steel tubing, bored and honed to finish of 16 RMS. Ram and piston of alloy steel, sealed with V-type packing. Ram seals can be replaced without removing front cap. Bolted flange permits easy removal of the cylinder from head member for serviceability. Standard travel 26 inches, optional travel lengths available.

4. FORKED RAM CAPS & FLAT CAP ADAPTERS
Forks for mounting, flat caps for demounting. Both made of special heat treated alloy steel with exceptional hardness to resist deformation under load. Sizes vary with press size and capacity.

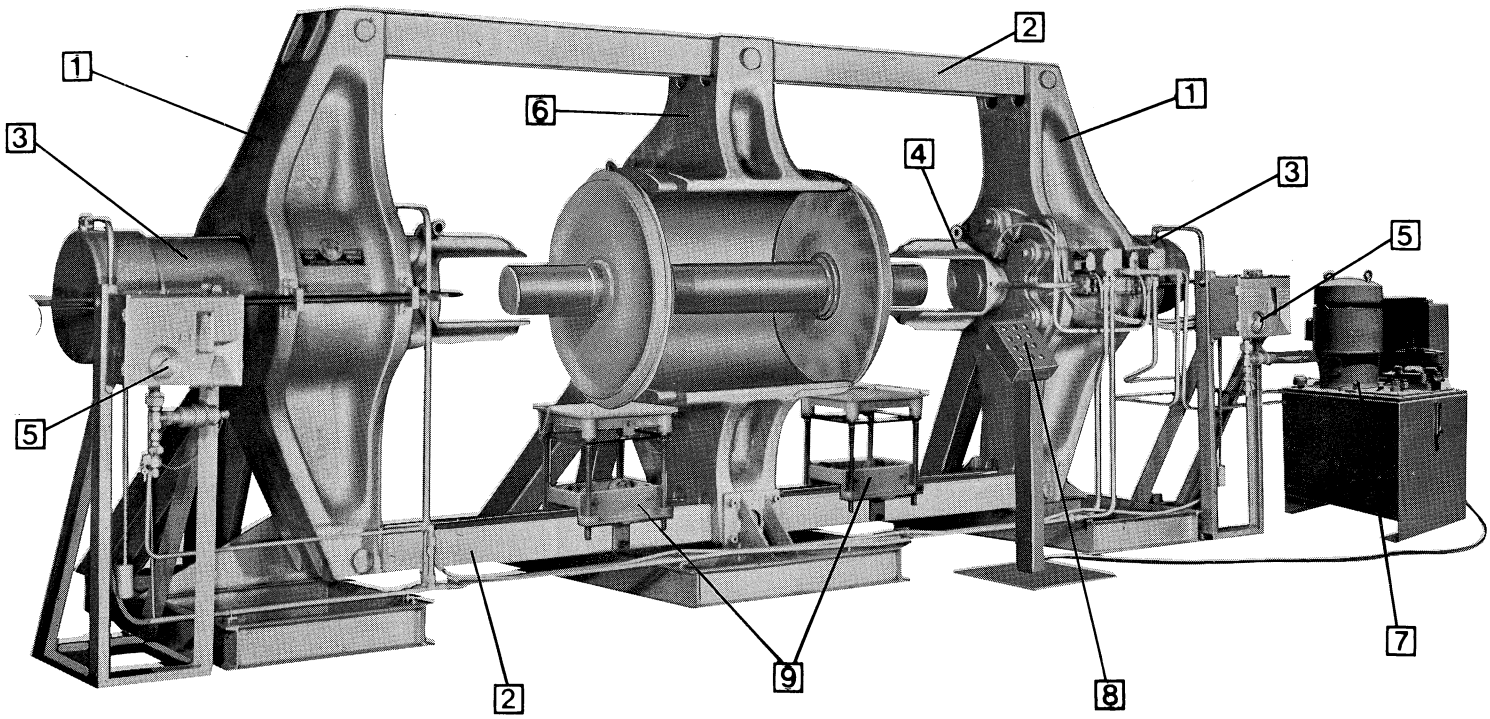

5. RECORDING GAUGES
A record of press tonnage and distance of wheel placement on axle is recorded, with space for written identification of each wheel. One gauge is provided with single-end presses, 2 gauges with double-end presses.

6. YOKE ABUTMENT MEMBER
Cast steel with 130,000 psi tensile strength, precision machined, designed for multiple "nesting" of yoke adapters used with varied axle sizes. Joined to tension bars at bearing points by large round steel keys.

7. HYDRAULIC POWER UNIT
The "heart" of any press, completely designed and built by Rodgers. Contains two pumps to provide a dual range of pressures—low pressure, high speed approach and return, and high pressure when work load is contacted. Pump units are powered by a 15 HP electric motor on 200 and 300 ton presses, and 25 HP motor on larger presses.

8. REMOTE POWER CONTROL
A 25 ft. cable between pump unit and pedestal-mounted control console permits operator to view working pressures on the Recording Gauges, and have positive control of the ram as work cycle progresses. Standard controls include APPROACH, PRESS, RETURN, START and STOP. Optional controls include air-operated bearing blocks, kicker cylinders for centering axles, and hydraulic tilting ejectors.

9. ELEVATOR DOLLIES
Hydraulic elevator dollies receive wheel sets at floor level (where axle and cylinder centerlines coincide). Dollies are mounted on grooved wheels with ball bearings to ride right or left for quick positioning to mount or demount.

Rodgers Wheel Presses...

Consider these features when you select:

1. Single-end presses require rotating of wheel and axle sets from end-to-end to demount both wheels. With double-end presses, wheel and axle sets are rolled into the press to working position only once, and hydraulic rams on both ends mount or demount without changing axle position.
2. All Rodgers wheel presses are designed to be pit-mounted to eliminate the need of overhead cranes when placing wheel sets in the press. Wheels are easily positioned in the press at floor level, then raised or lowered to precise working height by hydraulic elevating dollies.
3. Rodgers wheel presses remove wheels by pressing on the wheel hubs, not the rims. This eliminates the possibility of dangerous stress and warping of the wheels. An exception to this is the removal of diesel wheels without removing drive gears. In this case, the diesel wheel is of heavier construction, not as susceptible to warping, and can be removed by pressure on the rim.
4. Main cylinders of a Rodgers wheel press can be fully extended at full pressure without damage, and do not require a stroke limiting device. They are bolted to the cylinder head members in a manner which assures proper alignment at all times, yet they can be removed for service if ever required. Rodgers designs and builds press cylinders for such outstanding service they are often used in rebuilding other makes of presses!
5. Head and abutment members, yokes and tension bars, the main structural members of a Rodgers Press, are considerably lighter by weight than those of some other presses, yet they have a tensile strength that is more than adequate for rated capacity of the press. A lesser but important side benefit of a lighter Rodgers press is the significant lowering of shipping costs, a factor to be considered in total initial cost.
6. All Rodgers wheel presses are priced and delivered complete with cylinders, power unit, remote power control console, recording gauges for mounting presses, and piping and wiring from power unit to press and control console.
7. All Rodgers wheel presses are completely assembled and tested at the factory prior to shipment.

SINGLE-END VERTICAL

Demounting/Mounting Presses 300-400-600 Ton Capacities

For the shop with relatively low volume of wheel set repair and maintenance. All work enters and leaves from one side, and wheel sets are rotated end-for-end to demount both wheels. Can be equipped for straight-through, semi-automatic production mounting. Fully equipped with ram cap adapters. spacers and yoke adapters to handle all standard A.A.R. wheel and axle sizes.

DOUBLE-END VERTICAL

Demounting/Mounting Presses 300-400-600 Ton Capacities

Designed for the shop with higher volume production of wheel sets, but limited floor space. Work enters and leaves from one side. With rams on both ends, demounting or mounting of both wheels is accomplished without removing and rotating axle end-for-end. Equipped with two recording gauges and accessories to handle all standard A.A.R. wheel and axle sizes.

DOUBLE-END HORIZONTAL

Demounting/Mounting Presses 300-400-600 Ton Capacities

The high-volume production and/or repair press for the shop designed for one direction of work flow. Wheel sets flow through the press, entering from one side, leaving from the other side. Often installed with straight-through tracks. With rams on both ends, wheels can be demounted or mounted without changing wheel set position. Fully equipped with two recording gauges and accessories to handle all standard A.A.R. wheel and axle sizes.

PRODUCTION MOUNTING PRESSES

200-300 Ton Capacities

A single cylinder press built for fast, production line assembly of new wheels and axles, or the high-volume repair shop where another press is used for demounting only, and this press for mounting. Work enters one side, rolls out the other side on tracks at floor level. Fully equipped to handle all standard A.A.R. wheel and axle sizes.

the right model for every shop

MOUNTING PROCEDURE

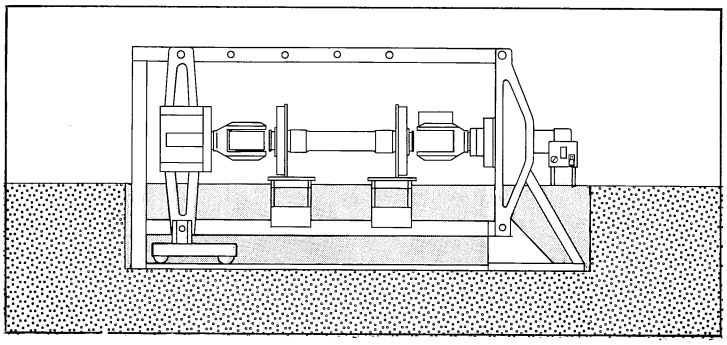

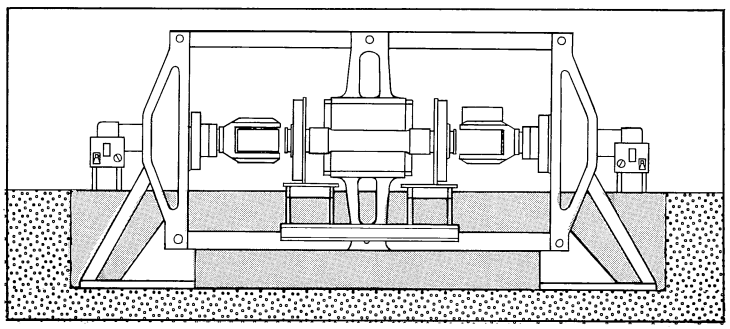

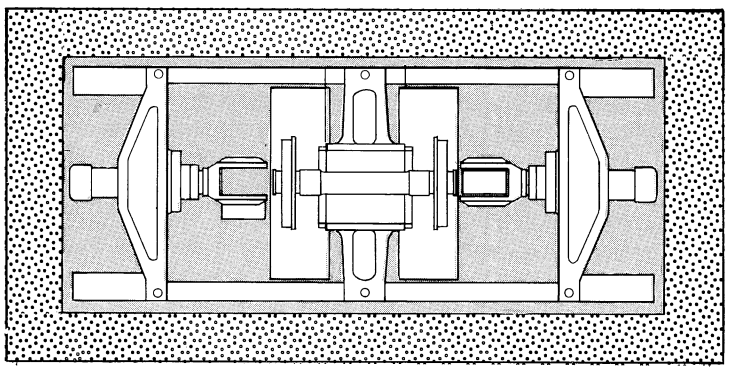

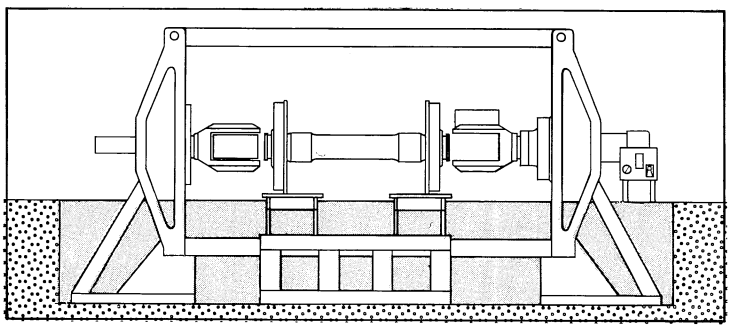

DEMOUNTING PROCEDURE

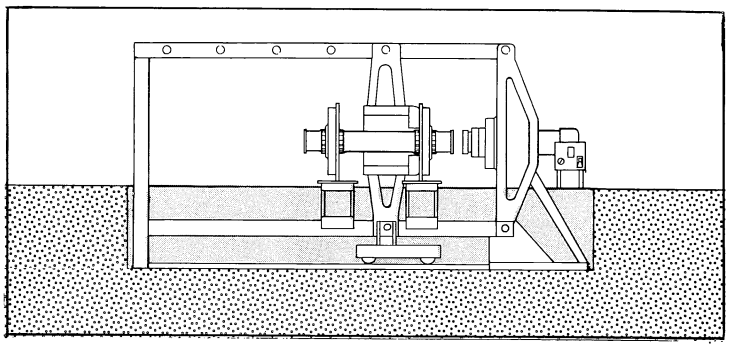

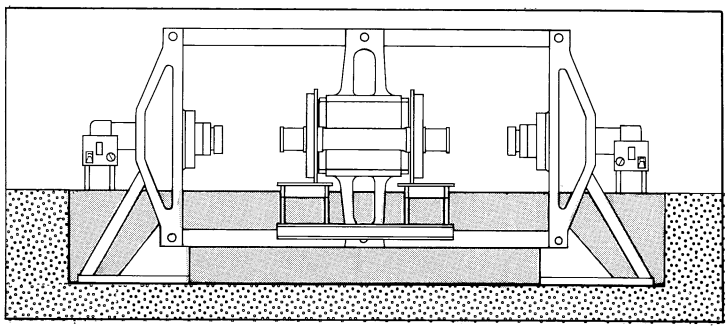

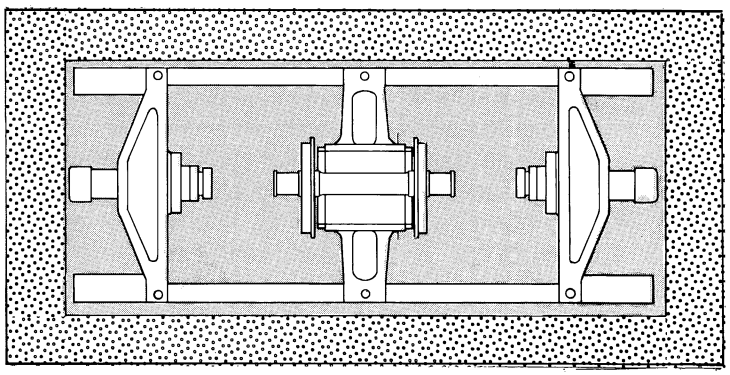

Rodgers / SINGLE END VERTICAL PRESSES

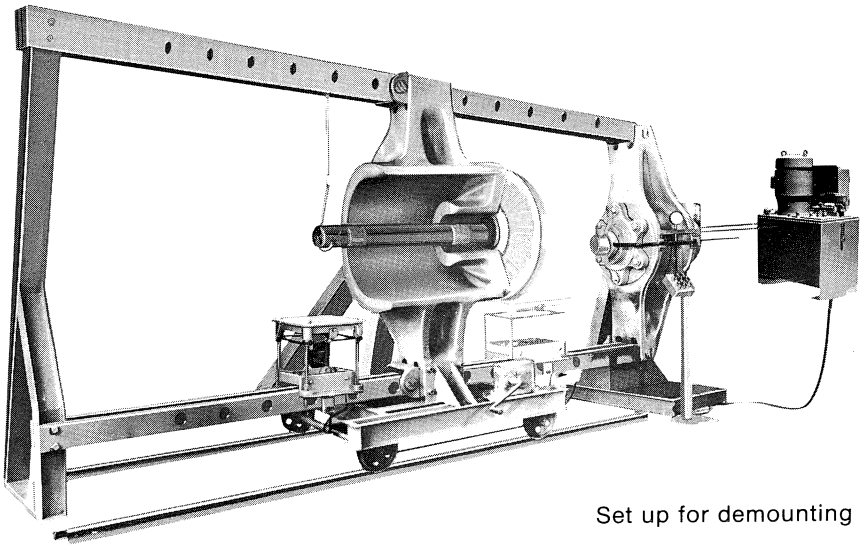

Set up for demounting

Rodgers Single-End Presses are offered in three capacities—300, 400 and 600 tons. Generally, the 300 and 400 ton presses are recommended for mounting and demounting all sizes of car wheels. The 600 ton press is recommended for repair operations requiring frequent demounting of diesel wheels, particularly to handle demounting of drive wheel sets with Spicer drives or Budd disc-type brakes without disturbing these assemblies. The yoke opening diameter on the 300 ton press can be 14 inches for car wheels, or 32 inches if it is necessary to demount drive wheels without disturbing drive gears. On the 400 and 600 ton presses, the yoke opening diameter can be 18 inches or 32 inches. If 32 inch yoke is selected, yoke adapters are available for standard car wheel removal at the hub.

The maximum distance between forked ram caps on all Single-End Vertical presses is either 79-1/2 inches or 84-1/2 inches, depending on length of axles to be handled. Forks are available with 7-3/4 or 9-3/4 inch clearance for different axle diameters.

For mounting, the press can be set up for entering loose wheel and axle assemblies from one side and removing the completed assemblies from the same side. However, it can also be set up for straight-through production, with wheel assemblies rolled in

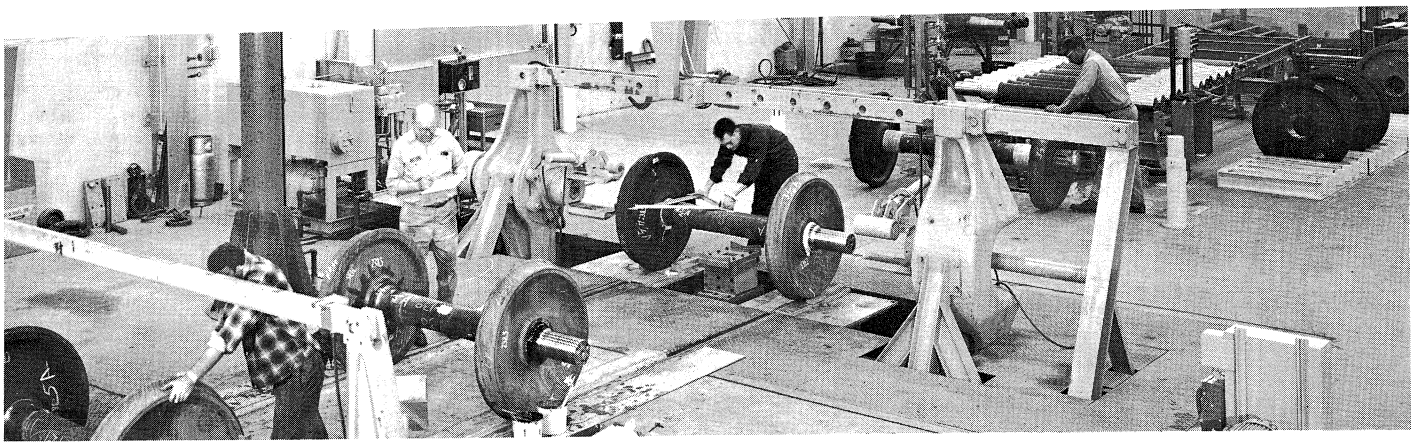

FOR MOUNTING & DEMOUNTING • 300-400-600 TON CAPACITIES

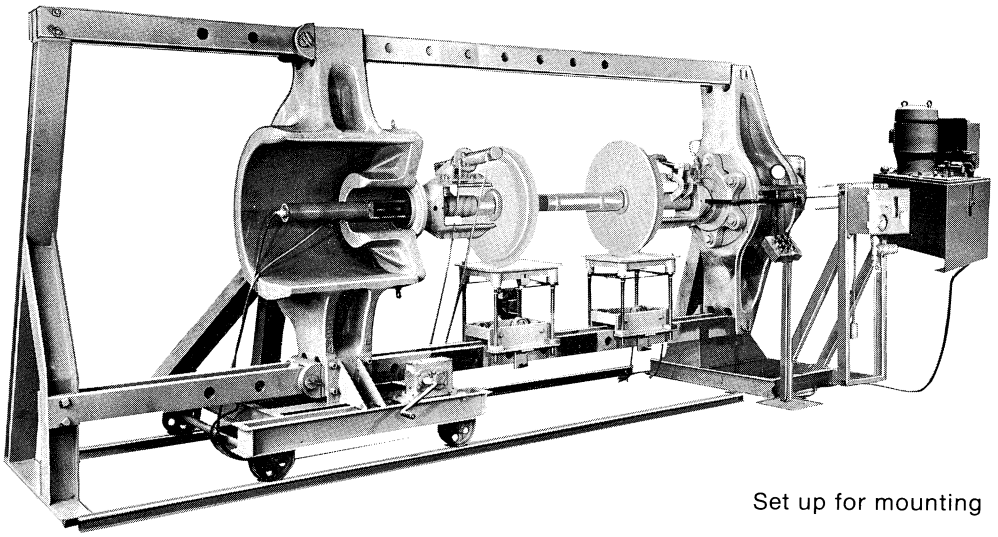

Set up for mounting

one side and out the other side on tracks. In this configuration, a kicker cylinder pushes wheel assembly to center it with the tracks, and another kicker cylinder tilts the dollies to roll the finished assembly out.

To use the press for demounting only, simply remove the forked ram cap and kicker cylinder assembly, and move the yoke abutment member into position for the axle length to be handled.

The complete hydraulic system, including power unit, cylinder and controls built by Rodgers, is included with the press, along with piping and wiring between press and power unit.

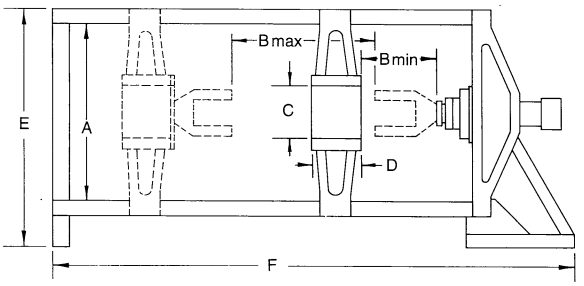

Rodgers Single-End Vertical Wheel Presses—Mounting & Demounting *Dimensions In Inches*

Model Number	Press Capacity (Tons)	Approx. Weight (Lbs.)	A	B Max.	B Min.	C	D	E	F
CW300-SV14-72	300	11,300	72	84½	14	14	16	98	198
CW300-SV32-72	300	16,000	72	84½	14	32	34	98	198
CW400-SV18-72	400	15,400	72	84½	14	18	22	98	198
CW400-SV32-72	400	18,700	72	84½	14	32	34	98	198
CW600-SV18-72	600	21,000	72	84½	14	18	22	98	198
CW600-SV32-72	600	21,600	72	84½	14	32	34	98	198

Rodgers / SINGLE END VERTICAL PRESSES

DEMOUNTING PROCEDURE

1. If the press is presently set up for mounting, the bearing blocks and kicker cylinder are removed.
2. Flat ram cap is placed on the main hydraulic cylinder.
3. Yoke adapters are selected to fit the wheel and axle size to be handled and placed on the abutment member.

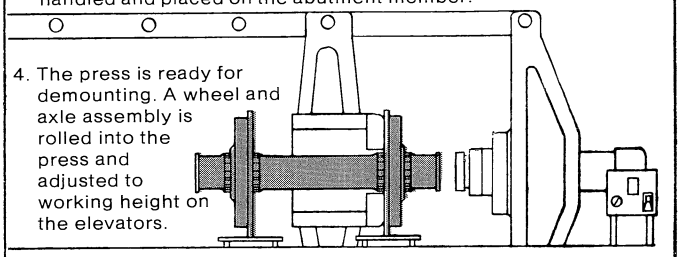

4. The press is ready for demounting. A wheel and axle assembly is rolled into the press and adjusted to working height on the elevators.

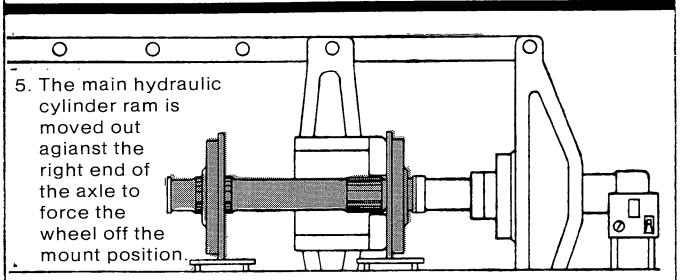

5. The main hydraulic cylinder ram is moved out agianst the right end of the axle to force the wheel off the mount position.

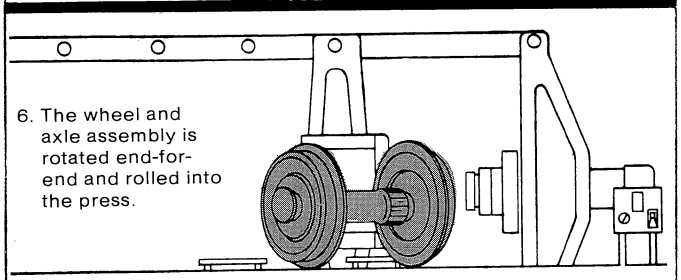

6. The wheel and axle assembly is rotated end-for-end and rolled into the press.

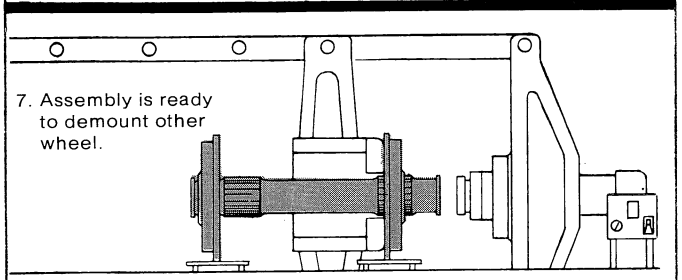

7. Assembly is ready to demount other wheel.

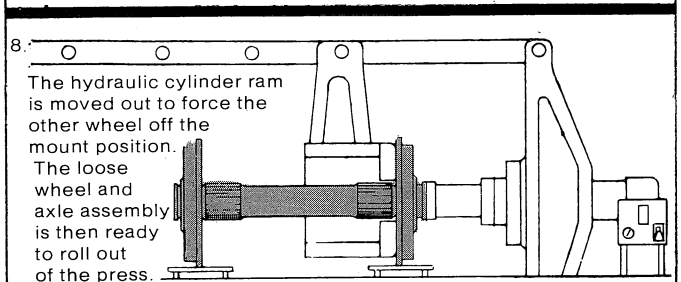

8. The hydraulic cylinder ram is moved out to force the other wheel off the mount position. The loose wheel and axle assembly is then ready to roll out of the press.

DEMOUNTING PROCEDURE

Wheel with drive gear.

1. If press has previously been set up for mounting, recording gauge is disconnected, bearing blocks and kicker cylinder removed and flat ram cap attached to the cylinder. If previously set up for demounting car wheels, yoke adapters are removed from the abutment member to provide the maximum 32-inch yoke opening to clear drive gears.

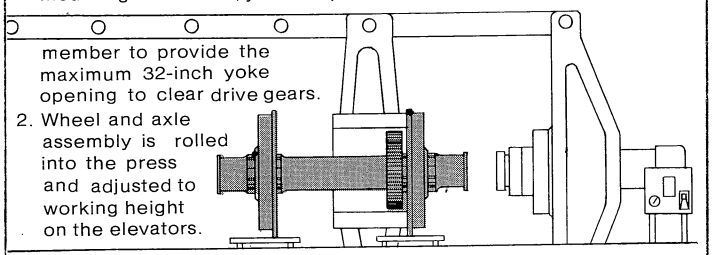

2. Wheel and axle assembly is rolled into the press and adjusted to working height on the elevators.

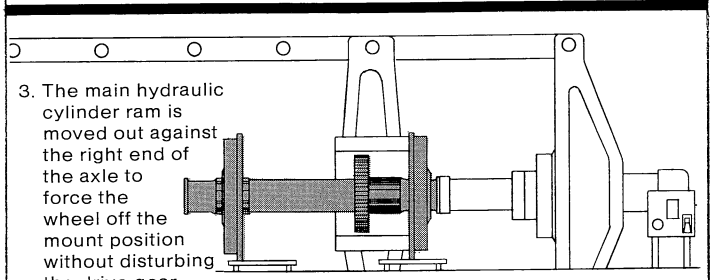

3. The main hydraulic cylinder ram is moved out against the right end of the axle to force the wheel off the mount position without disturbing the drive gear.

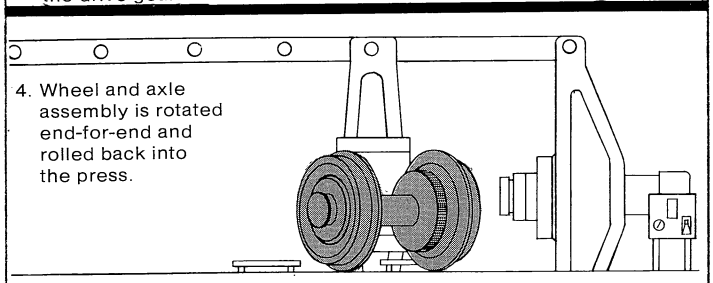

4. Wheel and axle assembly is rotated end-for-end and rolled back into the press.

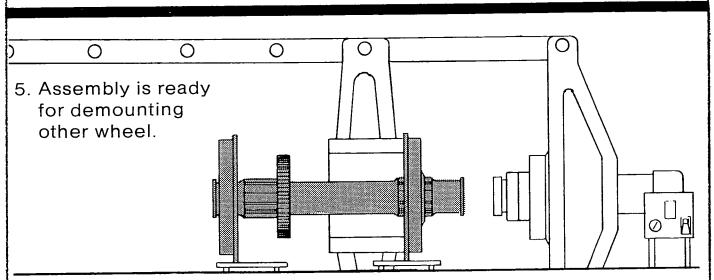

5. Assembly is ready for demounting other wheel.

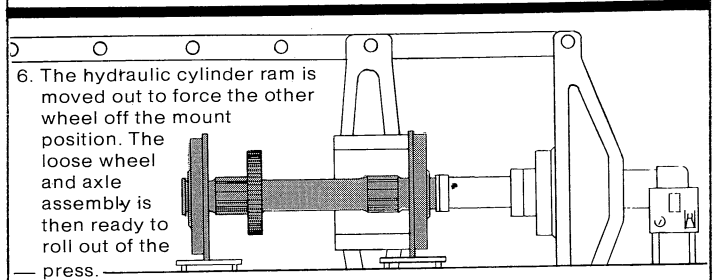

6. The hydraulic cylinder ram is moved out to force the other wheel off the mount position. The loose wheel and axle assembly is then ready to roll out of the press.

MOUNTING PROCEDURE

1. If the press has previously been set up for demounting, the abutment member is moved to the left to accomodate axle length. Forked ram caps, bearing blocks and kicker cylinder are then attached, and recording gauge connected.
2. Wheels are placed on the axle, and the loose assembly rolled into the press. Elevators are then adjusted to proper working height.
3. The left bearing block is moved to position between the tines of the forked ram cap on the abutment member, and the right bearing block is moved out, permitting the right ram cap fork to clear the axle.

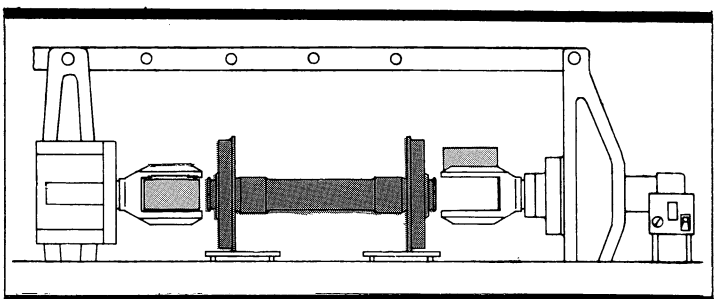

4. The hydraulic cylinder ram fork is moved out against the right wheel hub, forcing the wheel to the mounted position. The recording gauge records tonnage and distance for the right wheel.

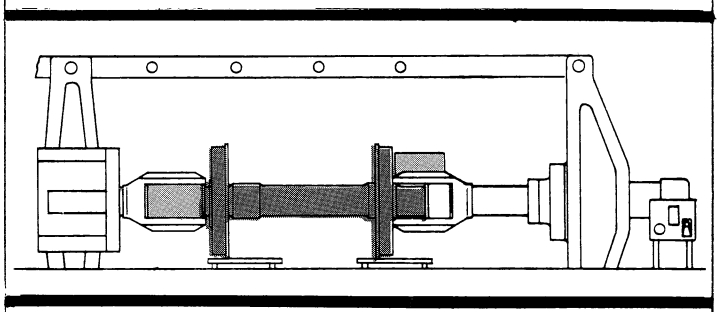

5. The hydraulic ram is retracted, the right bearing block moved into the right fork, and the left bearing block moved out of the abutment fork to clear the left end of the axle.

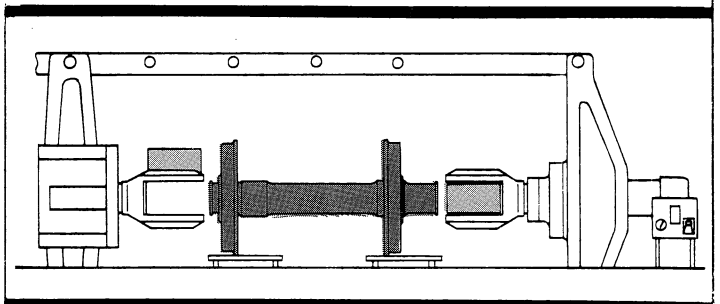

6. The hydraulic ram is moved out to mount the left wheel. The recording gauge records tonnage and distance of the left wheel.

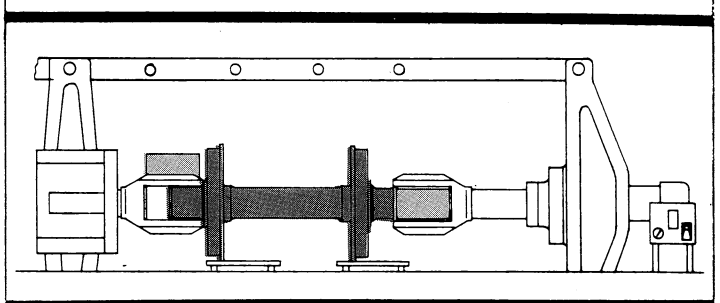

7. The hydraulic ram is retracted. The kicker cylinder ram is extended to return the wheel and axle assembly to center position on the elevating dollies. The completed assembly is then ready to move out of the press and on to the bearing press.

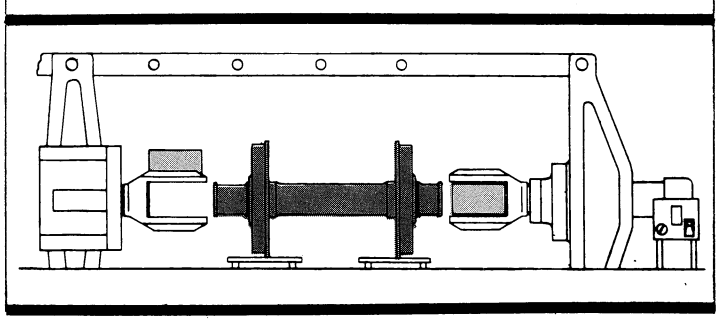

Rodgers/DOUBLE-END VERTICAL PRESS

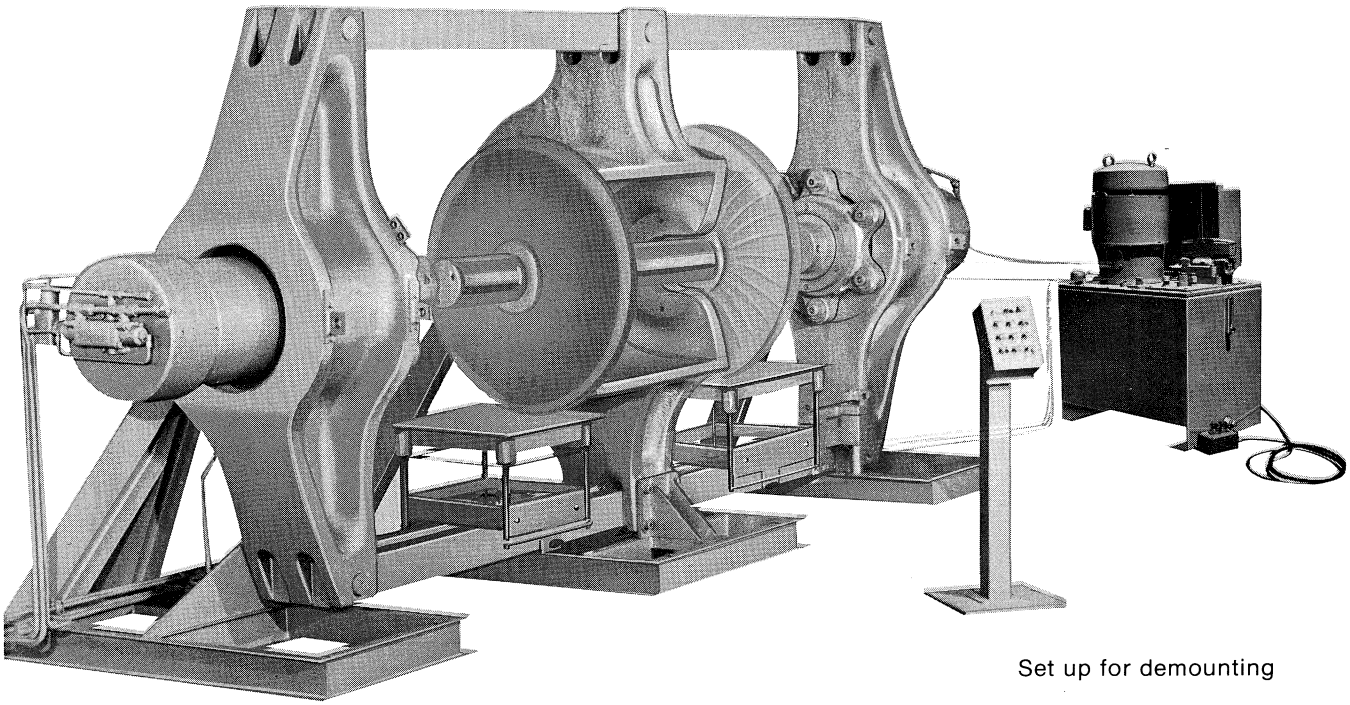

Set up for demounting

The biggest advantage of Rodgers Double-End Vertical presses over single-end presses is in demounting—both wheels can be removed without rotating the axle end-for-end in the press.

Double-End Vertical presses in 300 and 400 ton capacities are recommended for high volume assembly in a minimum floor space where straight-through work flow is not practical. All work is entered and removed from one side of the press. Usually a turntable is installed by the user to facilitate transfer of completed wheel sets to the next operation.

The 600 ton press is generally recommended for repair operations requiring frequent demounting of diesel wheels, particularly when drive wheels must be demounted without disturbing Spicer drives or Budd-type disc brakes.

The standard yoke opening in this press group is 14 inches on the 300 and 400 ton models, and 18 inches on the 600 ton model to remove standard car wheels by pressing on the hub. The maximum yoke opening is 32 inches for demounting diesel wheels without disturbing drive gears. If the latter size is selected, adapters are provided to reduce yoke opening for handling car wheels.

All Double-End Vertical presses are furnished complete with Rodgers-built hydraulic power units, cylinders, controls and piping and wiring between press and power unit. Cylinders on both ends are equipped with separate recording gauges to give accurate tonnage/distance readings for each wheel as it is mounted.

FOR MOUNTING & DEMOUNTING • 300-400-600 TON CAPACITIES

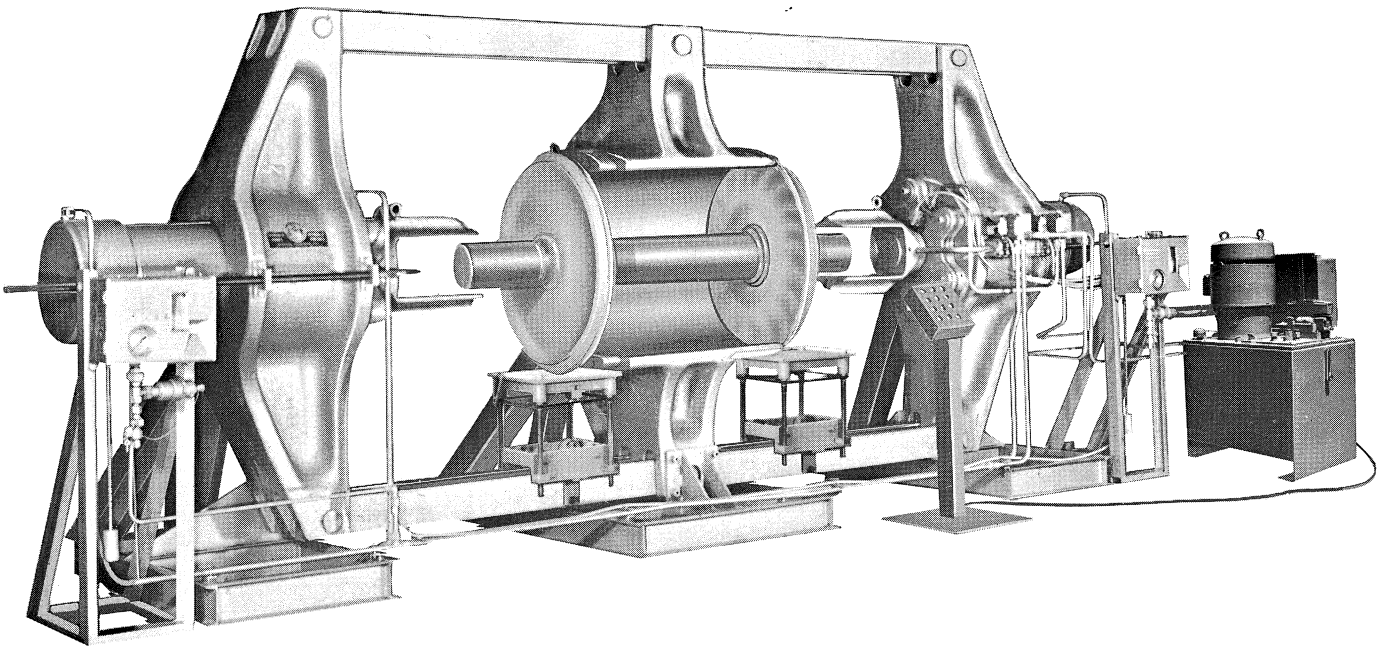

Set up for mounting

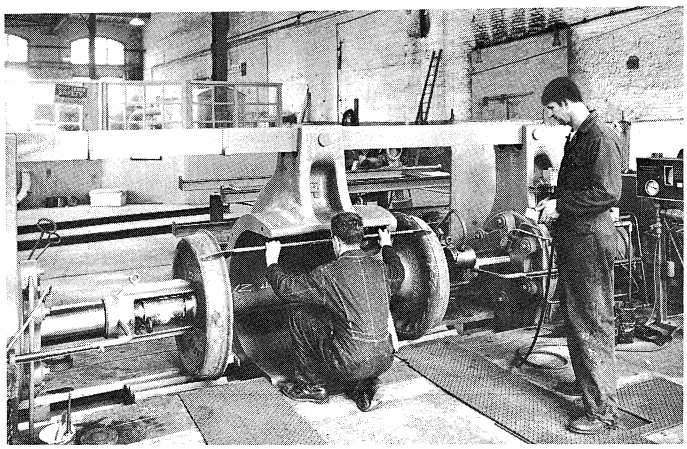

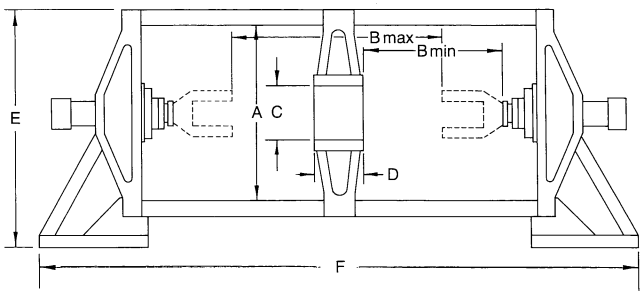

Rodgers Double-End Vertical Wheel Presses—Mounting & Demounting *Dimensions in Inches*

Model Number	Press Capacity (Tons)	Approx. Weight (Lbs.)	A	B Max.	B Min.	C	D	E	F
CW300-DV32-72	300	18.900	72	84½	23¾	32	34	92	260
CW400-DV32-72	400	22.200	72	84½	23¾	32	34	92	260
CW600-DV32-72	600	27,300	72	84½	23¾	32	34	92	260

DEMOUNTING PROCEDURE

1. If the press is presently set up for mounting, bearing blocks are removed and flat ram caps are attached to both hydraulic cylinders.
2. Yoke adapters are installed as required to fit wheel and axle size to be handled.
3. Wheel and axle assembly is rolled into the press, and elevated to proper working height.

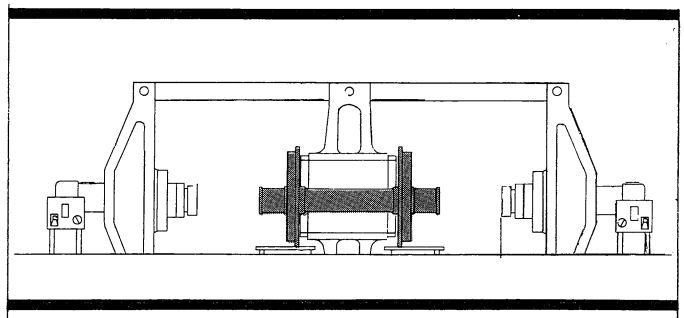

4. The right hydraulic ram is moved out to demount the right wheel, then the ram is retracted.

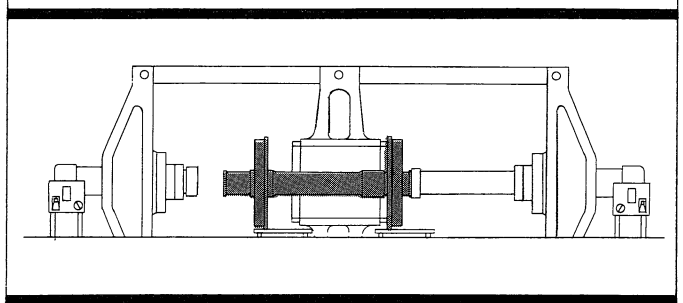

5. The left hydraulic ram is moved out to demount the left wheel.

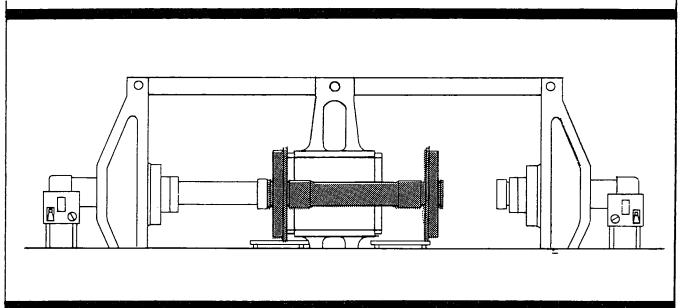

6. The left ram is retracted, and the loose wheel and axle assembly is ready to roll out of the press.

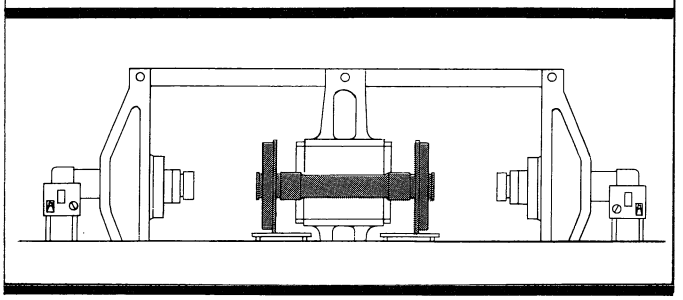

MOUNTING PROCEDURE

1. Forked ram caps with bearing blocks are attached to both hydraulic cylinders.
2. Recording gauges are connected.
3. A loose wheel and axle assembly is rolled into the press, and elevated to the proper working height.
4. The left bearing block is moved into the left forked cylinder ram cap, and the right bearing block moved out of the right forked cylinder ram cap.

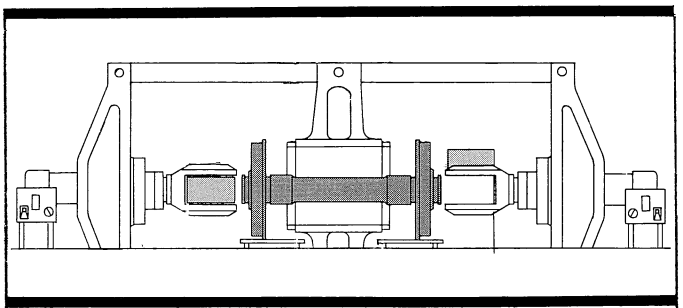

5. The right hydraulic ram is moved out to mount the right wheel.
6. The right recording gauge records tonnage and distance for the right wheel.

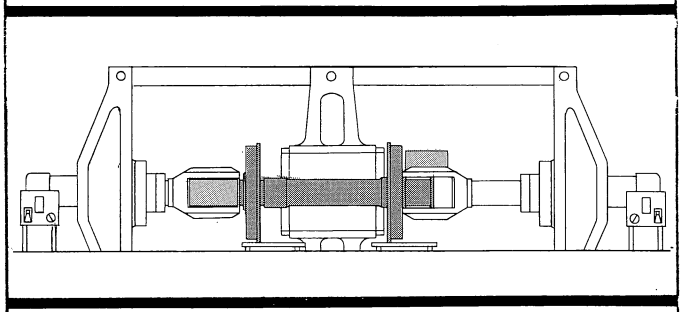

7. The right hydraulic ram is retracted.
8. The right bearing block is moved into the forked cylinder ram cap, and the left bearing block is moved out.

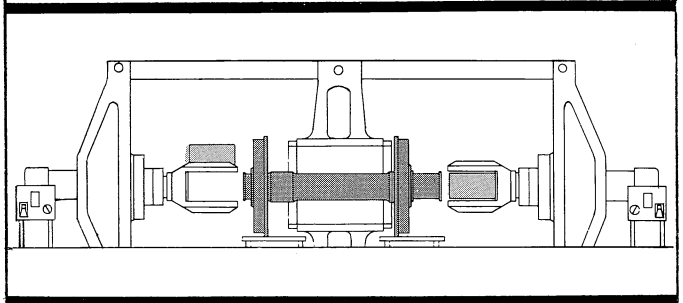

9. The left hydraulic ram moves out to mount the left wheel.
10. The left recording gauge records tonnage and distance.

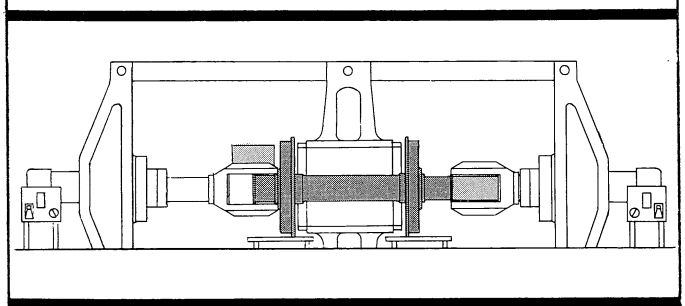

11. The left hydraulic ram is retracted, and the completed wheel and axle assembly is ready to roll out of the press.

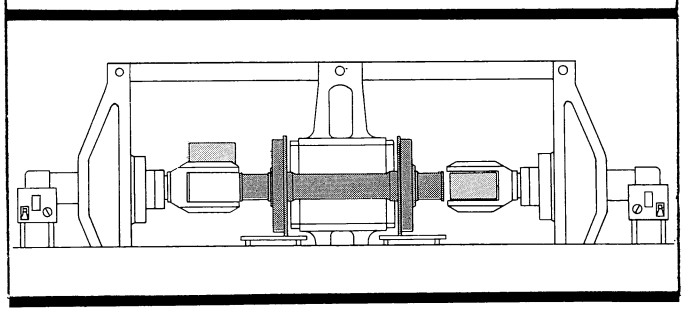

Rodgers / DOUBLE-END HORIZONTAL PRESSES

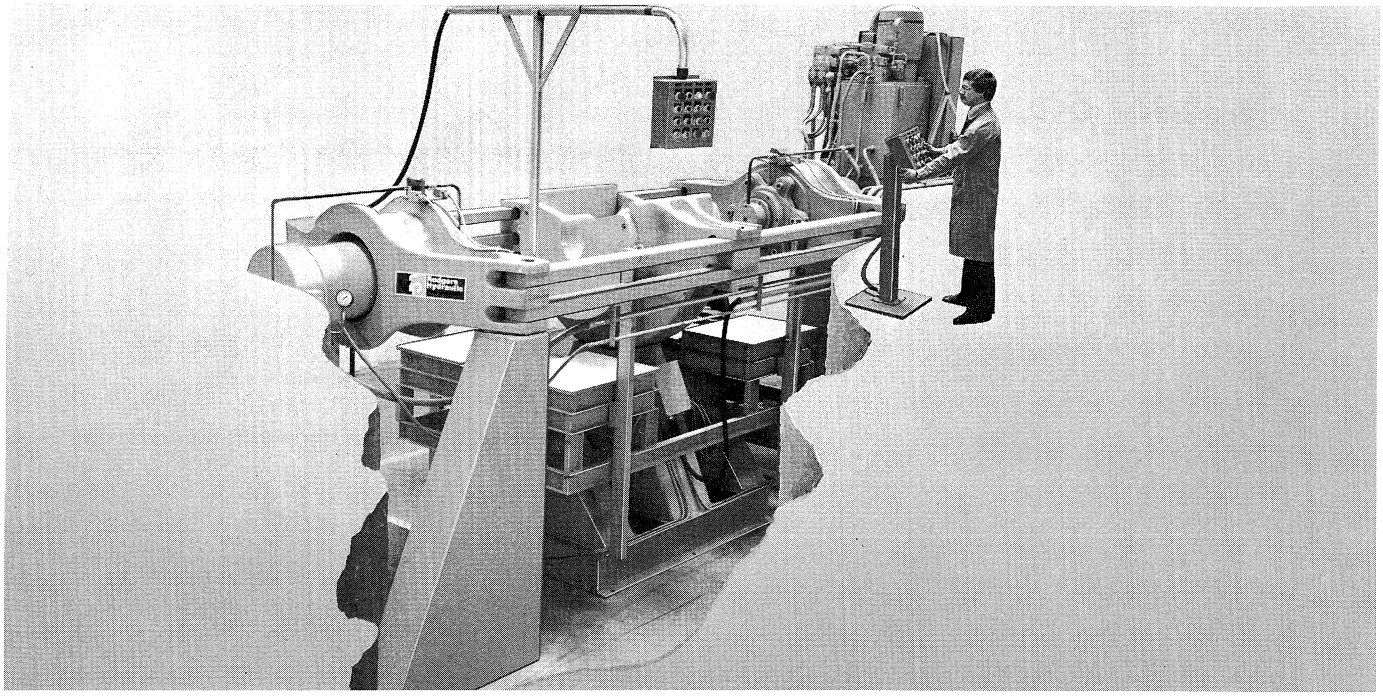

Rodgers Double-End Horizontal presses offer the best method of mounting and/or demounting wheels in a high volume production line. Wheel and axle assemblies are entered from one side of the press, and leave from the other side. This straight-through production capability is the only basic difference of the Double-End Horizontal press group from the Double-End Vertical presses. They are offered in 300, 400 and 600 ton capacities to suit production requirements in any shop, whether mounting or demounting or both.

In production mounting, loose wheel and axle assemblies are rolled into the press to the hydraulic dollies, which quickly lower the assembly to centerline of the cylinders in the press. When both wheels are mounted in correct position on the axle, the completed assembly is hydraulically raised, then rolled out the other side of the press.

In demounting, yoke adapters are installed in the yoke member to remove all standard car wheels by pressing on the hub. To remove diesel drive wheels without disturbing gears, yoke adapters are removed and wheels are removed by pressing on the rims.

Complete Rodgers-built hydraulic systems—power unit, cylinders and control console—are furnished, along with necessary piping and wiring from power unit to press. Forked ram caps are available with 7-3/4 or 9-3/4 inch clearance between forks to accomodate different axle diameters. Separate recording gauges are furnished for accurate tonnage/distance reading of each wheel as it is mounted.

Rodgers Double-End Horizontal Wheel Presses—Mounting & Demounting *Dimensions In Inches*

Model Number	Press Capacity (Tons)	Approx. Weight (Lbs.)	A	B Max.	B Min.	C	D	E	F
CW300-DH32-72	300	19.700	72	84½	23¾	32	34	84	260
CW400-DH32-72	400	23.000	72	84½	23¾	32	34	84	260
CW600-DH32-72	600	28.100	72	84½	23¾	32	34	84	260

FOR MOUNTING & DEMOUNTING • 300-400-600 TON CAPACITIES

DEMOUNTING PROCEDURE

1. If the press is presently set up for mounting, bearing blocks are removed and flat ram caps are attached to both hydraulic cylinders.
2. Yoke adapters are installed as required to fit wheel and axle size to be handled.
3. Wheel and axle assembly is rolled into the press, and elevated to proper working height.

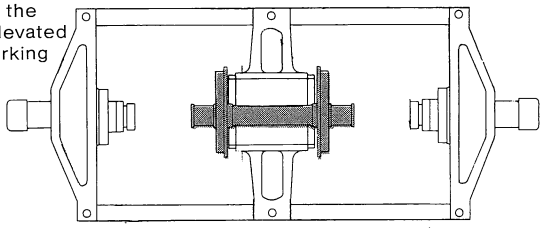

4. The right hydraulic ram is moved out to demount the right wheel, and the ram is retracted.

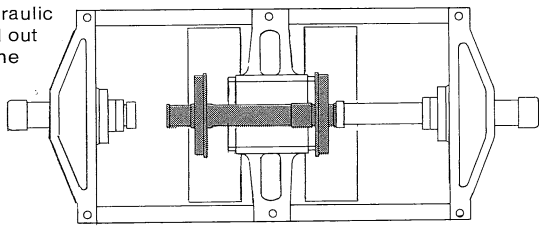

5. The left hydraulic ram is moved out to demount the left wheel.

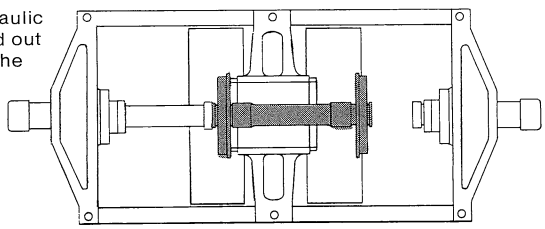

6. The left ram is retracted, and the loose wheel and axle assembly is ready to roll out of the press.

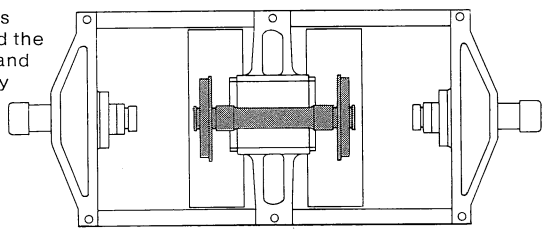

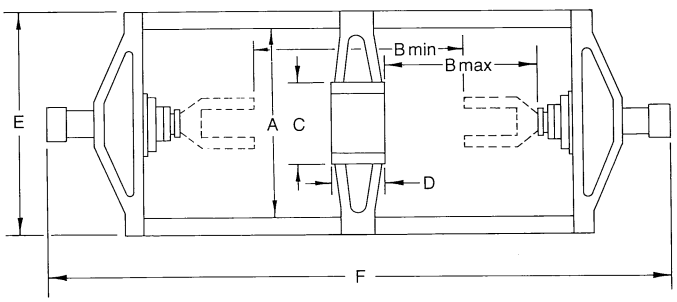

MOUNTING PROCEDURE

1. Forked ram caps with bearing blocks are attached to both hydraulic cylinders.
2. Recording gauges are connected.
3. A loose wheel and axle assembly is rolled into the press, and elevated to the proper working height.
4. The left bearing block is moved into the left forked cylinder ram cap, and the right bearing block moved out of the right forked cylinder ram cap.

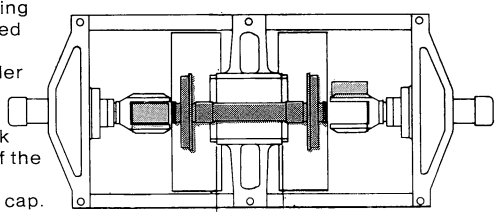

5. The right hydraulic ram is moved out to mount the right wheel.
6. The right recording gauge records tonnage and distance for the right wheel.

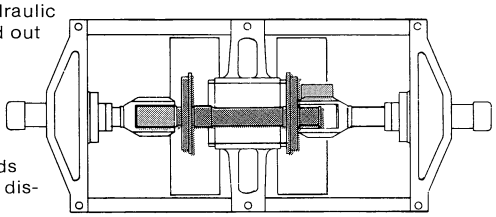

7. The right hydraulic ram is retracted.
8. The right bearing block is moved into the forked cylinder ram cap, and the left bearing block is moved out.

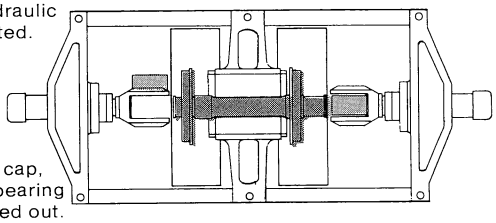

9. The left hydraulic ram moves out to mount the left wheel.
10. The left recording gauge records tonnage and distance.

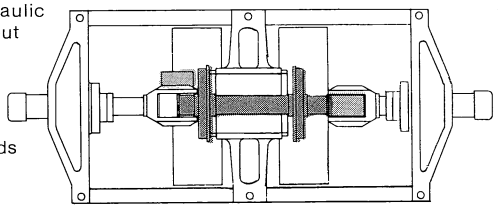

11. The left hydraulic ram is retracted, and hydraulic elevators raise the completed wheel and axle assembly to floor level, ready to roll out of the press.

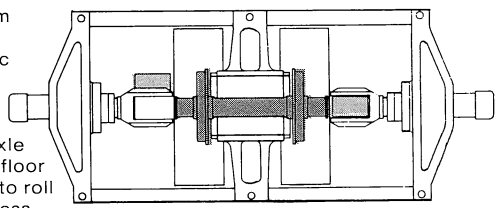

Rodgers/PRODUCTION MOUNTING PRESSES

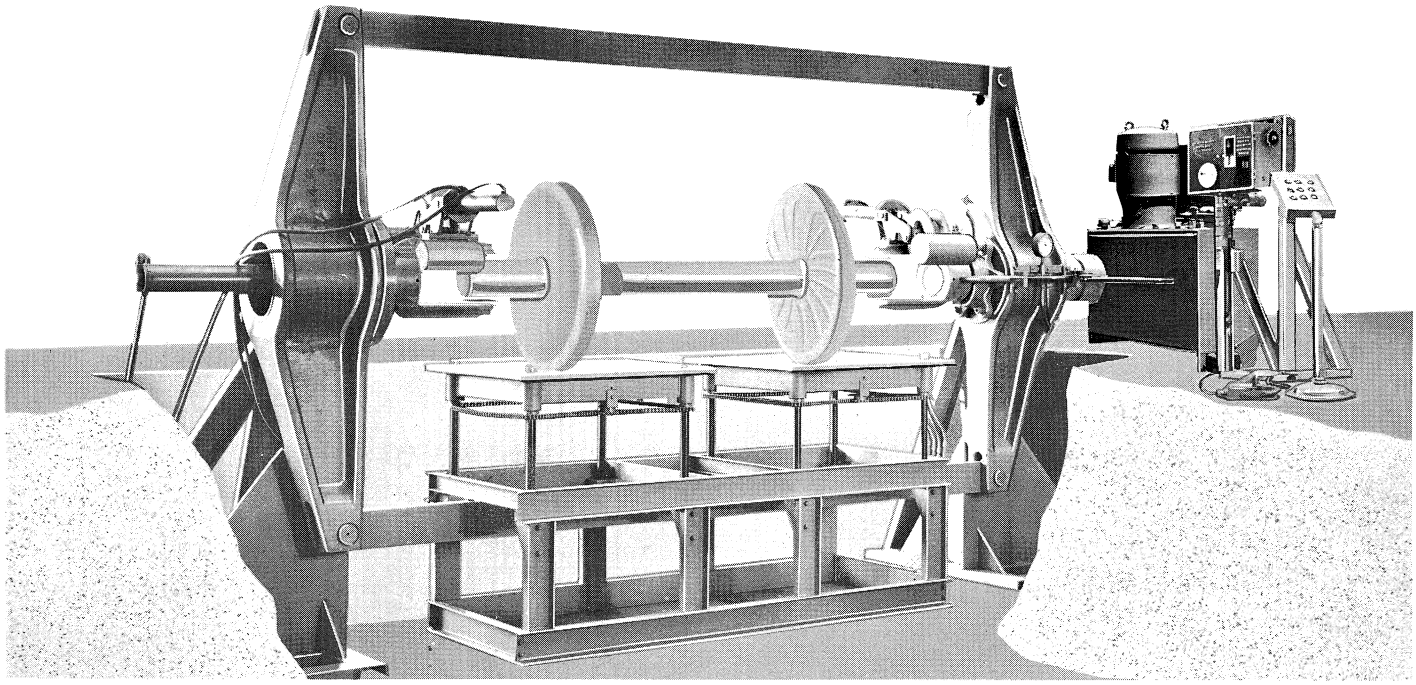

Rodgers Production Mounting press is designed primarily for large shops where only new wheel and axle assemblies are produced. However, it also is efficient in rebuilding operations where volume work flow includes moving wheel assemblies through a demounting station, a repair center, then to this press for production assembly.

The Production Mounting press is usually pit mounted, with loose wheel and axle sets entering at floor level from one side of the press, and completed assemblies leaving the other side. Straight-through tracks are often installed for faster, easier handling of assemblies.

Semi-automatic cycling is accomplished with a kicker cylinder (opposite the main cylinder) which moves finished wheel assemblies to the center of the press and in line with tracks. A second kicker cylinder tilts the dolly platforms and rolls finished assemblies out of the press and onto the tracks.

Rodgers Production presses are available in two capacities, 200 and 300 ton, to handle all standard passenger, freight and diesel wheels. Forked ram caps are furnished with 7-3/4 or 9-3/4 inch clearance to handle different axle diameters.

Presses are furnished complete with Rodgers hydraulic power unit, cylinder, controls and necessary piping and wiring between power unit and presses.

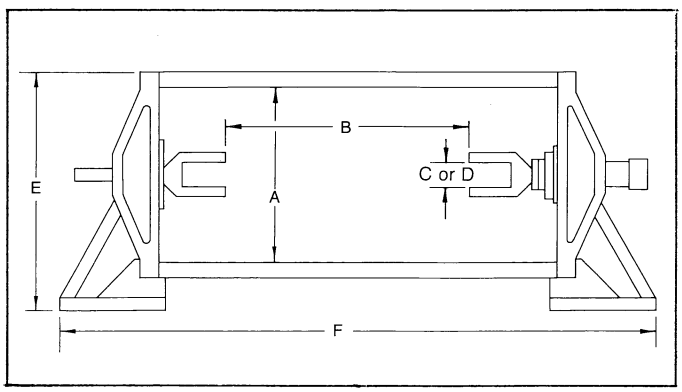

Rodgers Wheel Presses for Production Mounting *Dimensions In Inches*

Model Number	Press Capacity Tons	Approx. Weight (Lbs.)	A	B	C	D	E	F
CW200-ON	200	6,700	72	88	9¾	7¾	102	212
CW300-ON	300	8,900	72	85	9¾	7¾	97	212

FOR PRODUCTION MOUNTING • 200 & 300 TON CAPACITIES

MOUNTING PROCEDURE

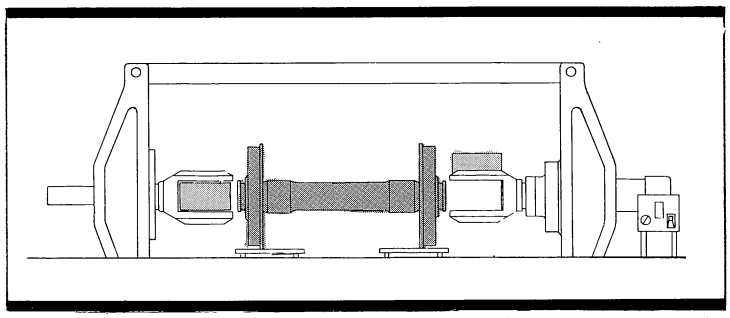

1. A loose wheel and axle assembly is rolled into the press, and adjusted to proper working height on the elevators.
2. The left bearing block is moved into the abutment member forked ram cap. The right bearing block is moved out of the forked cylinder ram cap.

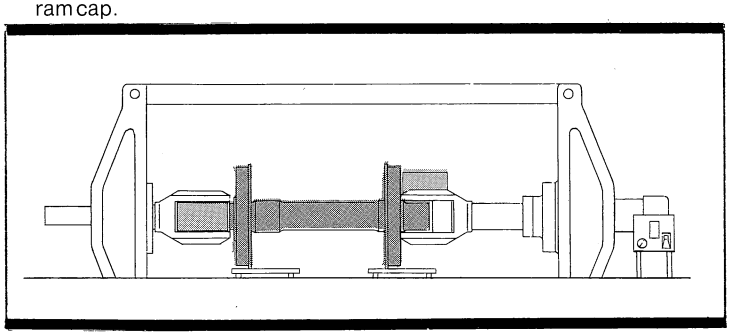

3. The hydraulic ram moves out to mount the right wheel, and the recording gauge records tonnage and distance for the right wheel.

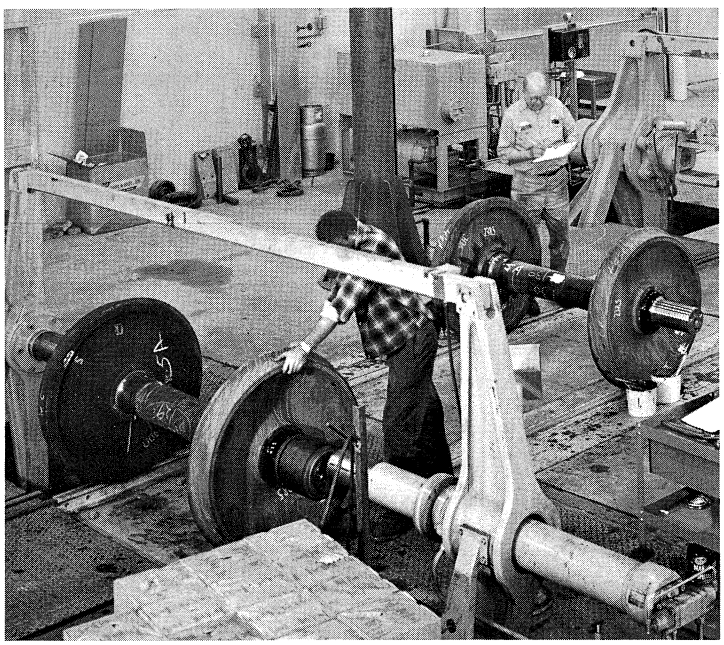

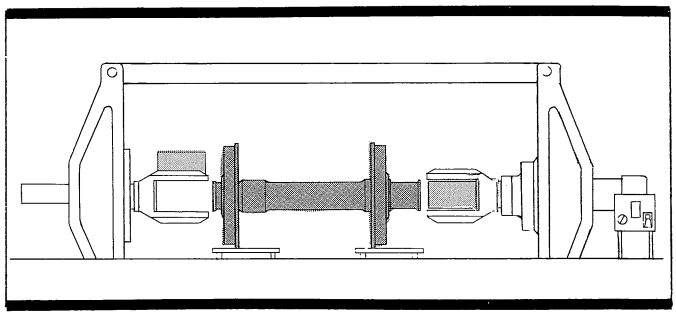

5. The hydraulic ram moves out to mount the left wheel, and the recording gauge records tonnage and distance for the left wheel.

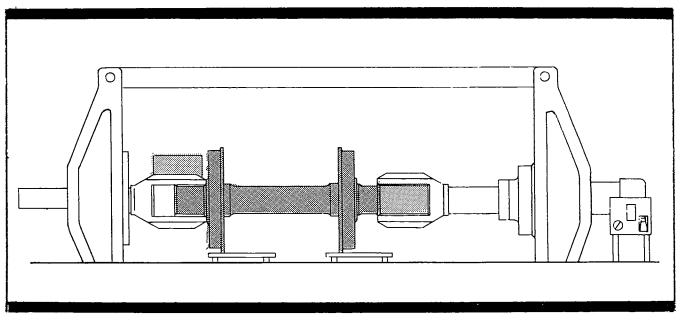

4. The hydraulic ram is retracted. The left bearing block is moved out of the abutment member forked ram cap, and the right bearing block is moved into the forked cylinder ram cap.

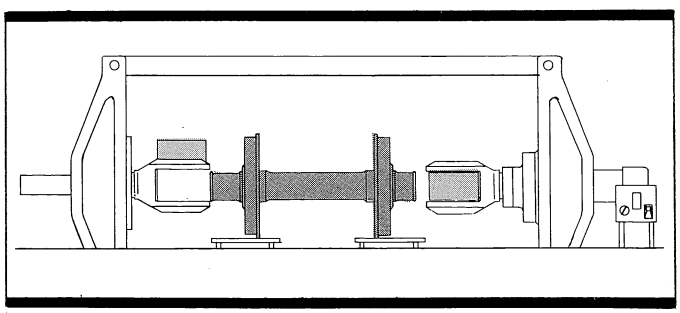

6. The hydraulic ram is retracted, and the kicker cylinder ram is extended to return the completed wheel and axle assembly to center position on the elevators, ready to roll off the press.

Rodgers / WHEEL PRESS COMPONENTS

CYLINDER RAMS

All cylinder rams in Rodgers wheel presses are specially designed and manufactured by Rodgers for press service. They are high pressure, two-way cylinders of threaded design, built to withstand full operating pressure in either direction.

Heavy-wall seamless steel cylinder tubing is honed to a finish of 12 to 16 RMS. The mounting flange and threaded heads on both ends are made of heat treated cast steel alloy. An aluminum-bronze bearing surface is welded over the front head packing gland and piston for tighter tolerances and increased life. V-type Chevron packing assures lasting seal between piston and cylinder wall as well as ram and cap. Ram seals are accessible through an external gland for easy repacking without removing front cap.

Every cylinder is factory tested at rated capacity for structural soundness and leak resistance before installation in the press.

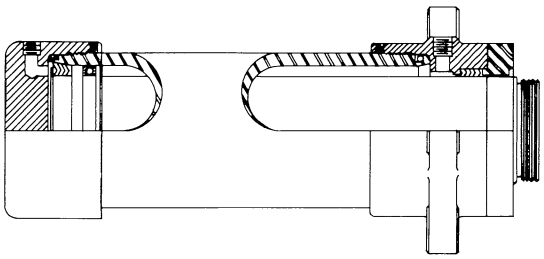

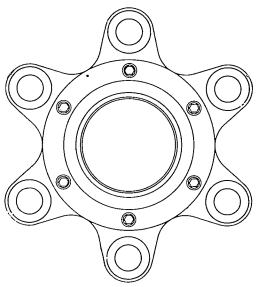

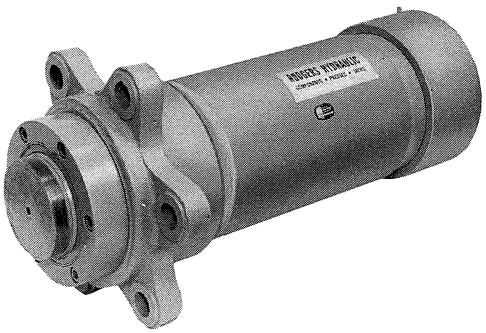

Press Capacity (Tons)	Cylinder		Pump Unit Model Number	Operating Pressures (PSI)			Ram Speeds (Inches Per Minute)		
	Inside Dia.	Ram Dia.		Approach	Press	Return	Approach	Press	Return
200	8	6½	3050	1000	7958	1000	103	20	270
200	8	6½	5001	1000	7958	1000	155	31	350
300	10	7½	3050	1000	7639	1000	72	13	135
300	10	7½	5001	1000	7639	1000	98	20	175
400	12	7½	3050	1000	7073	1000	50	9	65
400	12	7½	5001	1000	7073	1000	68	14	85
600	14	8	3050	1000	7795	1000	37	6½	45
600	14	8	5001	1000	7795	1000	50	10	60

POWER UNITS

Every Rodgers press is equipped with a hydraulic power unit entirely designed and built by Rodgers, including axial piston pumps, pressure control valves and directional control valves.

Each pump unit contains two pumps—a low volume/high pressure pump for high pressure pressing, and a high volume/low pressure pump for rapid cylinder approach and return. During the rapid approach both pumps operate together until the hydraulic pressure reaches 1000 PSI. Then an unloading valve "dumps" the low pressure pump, and the high pressure pump continues to complete the pressing operation. On the rapid return stroke of the cylinder, only the low pressure pump operates.

All high pressure components of a Rodgers pump unit are submerged in a 50-gallon reservoir to provide unusually low decibel sound levels—the entire pump unit is more quiet than required by present and proposed OSHA standards!

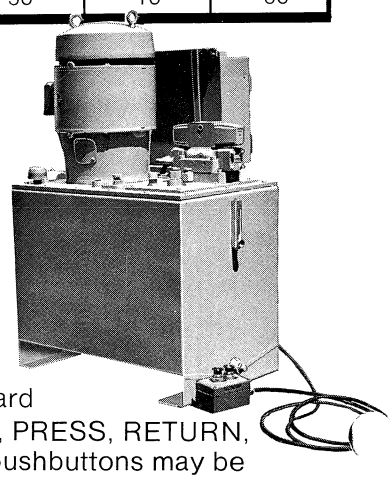

All hydraulic controls on a Rodgers wheel press are contained in a single pushbutton console mounted on a portable pedestal. Standard controls include APPROACH, PRESS, RETURN, STOP and START. Optional pushbuttons may be added to control air-operated bearing blocks, hydraulic elevating dollies (UP and DOWN), and kicker cylinders for re-centering axles on the dollies for rolling completed wheel assemblies off the press onto tracks.

ABUTMENT MEMBER FORKED RAM CAPS AND ADAPTERS

For single end presses only including models CW200-On and CW300-On. One required for each press. *Abutment Member Yoke Adaptors must be used See Table III

Capacity (Tons)	A	B	C	D	E	F	Abutment Member: Forked Ram Cap		Abutment Member: Adapter		Flat Ram Cap Adapter	
							Part No.	Approx Wt.	Part No.	Approx Wt.	Part No.	Approx Wt.
200	9¾	7 31/32	17⅛	23¼	2½	10¼	60709	320	53410	260	41476	23
	7¾	5 31/32	14⅝	20¾	2½	10¼	60710	155	53410	260	41475	13
300	9¾	7 31/32	17⅛	23¼	2½	13¼	60709	320	51474	300	41476	23
	7¾	5 31/32	14⅝	20¾	2½	13¼	60710	155	51474	300	41475	13
400	9¾	7 31/32	17⅛	23¼	1¾	9 11/16*	60332	320	50930	150	41476	23
	7¾	5 31/32	14⅝	20¾	1¾	9 11/16*	60333	155	50930	150	41475	13
600	9¾	7 31/32	17⅛	23¼	1¾	9 11/16*	60332	320	50930	150	41476	23
	7¾	5 31/32	14⅝	20¾	1¾	9 11/16*	60333	155	50930	150	41475	13

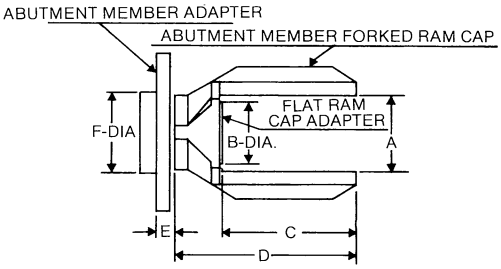

FORKED CYLINDER RAM CAPS AND ADAPTERS

Press Capacity (Tons)	A	B	C	D	Cylinder Ram Cap (Forked): Part No.	Cylinder Ram Cap (Forked): Weight Lbs.	Flat Ram Cap Adapter: Part No.	Flat Ram Cap Adapter: Weight Lbs.
200	9¾	7 31/32	17⅛	23¼	61831	320	41284	23
	7¾	5 31/32	14⅝	20¾	61830	155	41283	13
300	9¾	7 31/32	17⅛	23¼	60707	320	41284	23
	7¾	5 31/32	14⅝	20¾	60708	155	41283	13
400	9¾	7 31/32	17⅛	23¼	60917	320	41284	23
	7¾	5 31/32	14⅝	20¾	60916	155	41283	13
600	9¾	7 31/32	17⅛	23¼	60290	320	41284	23
	7¾	5 31/32	14⅝	20¾	60291	155	41283	13

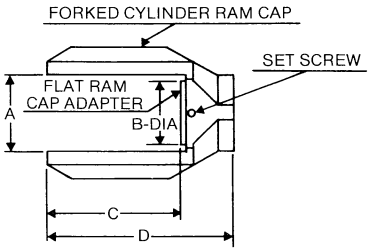

ABUTMENT MEMBER YOKE ADAPTERS

For demounting only.

One of each size required for single end presses and two of each size required for double end presses.

(M) is for master adapters and (N) is for nesting adapters. If an (N) adapter is desired, an (M) adapter must be ordered also.

Press Capacity (Tons)	Nominal Yoke Opening	A	B	C	Part Number	Approx. Weight
300	14	9 15/16	8	2½	60338N	70
	32	13½	10	2¼	60169M	140
		31	8	4	60616	1480
		9 11/16	7¾	1¾	60352N	80
		31	9¾	4	60293M	1480
400	18	9 11/16	7¾	1¾	60352N	80
	32	17½	9¾	1¾	60317M	370
		31	8	4	60616	1480
		9 11/16	7¾	1¾	60352N	80
		31	9¾	4	60293M	1480
600	18	9 11/16	7¾	1¾	60352N	80
	32	17½	9¾	1¾	60317M	370
		31	8	4	60616	1480
		9 11/16	7¾	1¾	60352N	80
		31	9¾	4	60293M	1480

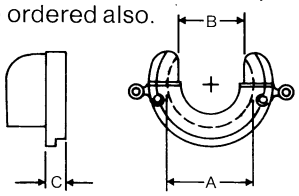

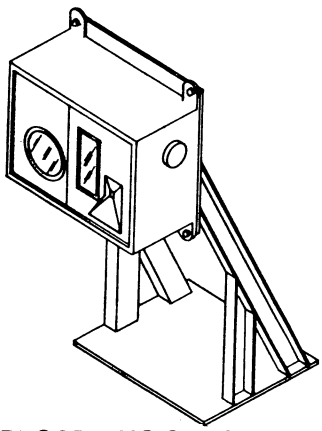

ABUTMENT YOKE ADAPTER SPACER

When required, use one for single end presses and two for double end presses.

Capacity (Tons)	A	B	C	Part Number	Approx. Weight
All	32	40	4	60292	360

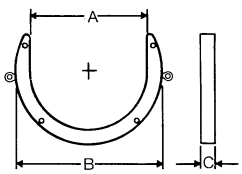

RECORDING GAUGES

These gauges provide a chart of tonnage and distance for each mounted wheel. The charts have space for writing identifying information for each wheel opposite its tonnage—distance diagram.

When required, use one gauge for single end presses and two gauges for double end presses. Unless otherwise specified, the charts will be graduated to 200 tons only.

Total weight including mounting frame and accessories-250 pounds.

CYLINDER FLAT RAM CAPS

One required for single end presses and two required for double end presses.

Press Capacity (Tons)	A	Part Number	Approx. Weight
300	7.260	53953	60
	7.264		
400	7.260	51910	60
	7.264		
600	7.760	50895	60
	7.764		

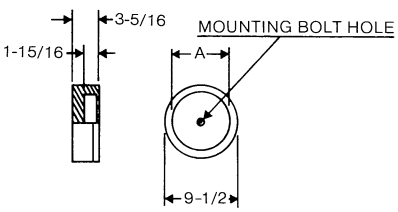

Your best single source for all presses

Rapid Transit Wheel Press

New 600-ton, semi-automatic, high production press specially designed for rapid transit wheel and axle sizes. Operator can mount or demount wheels, bearings and gear cases individually, or demount bearing and gear case together. Quick adjusting for different sizes. Complete with hydraulic power unit and double-acting rams designed and built by Rodgers.

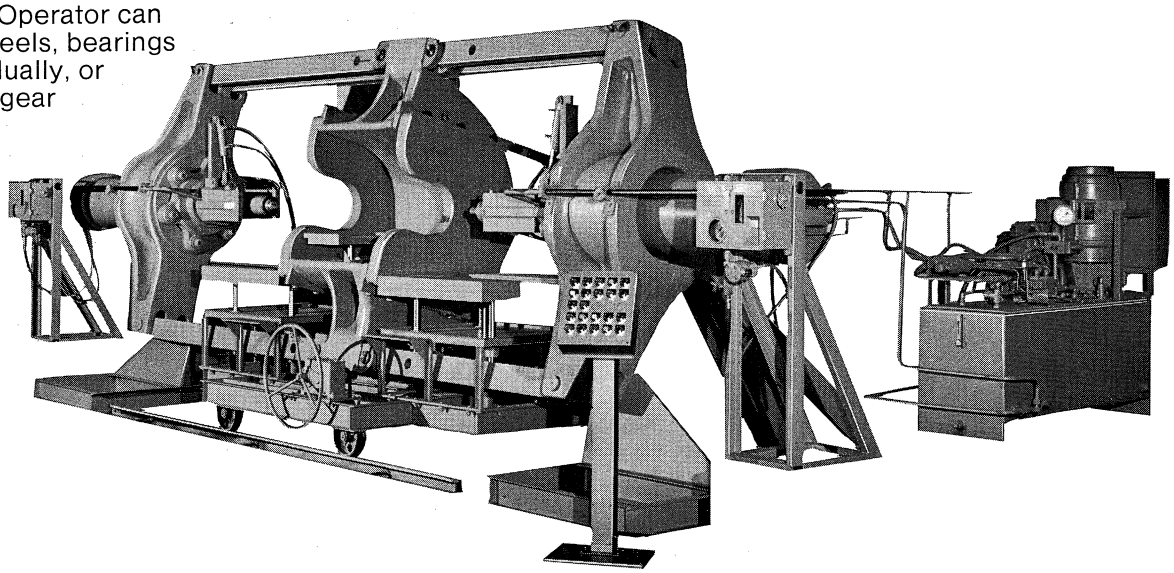

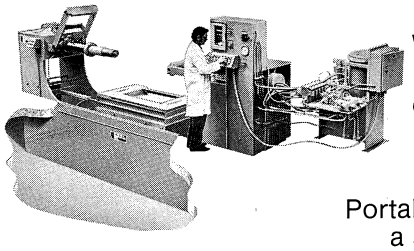

Wheel Bearing Press

Mount or demount all wheel bearings quickly on this new 75-ton capacity "C" frame press. Designed to be pit mounted, so wheel and axle assemblies can easily be rolled through for fast production.

Forcing Presses

Portable, horizontal and 75-degree inclined configurations—a selection of 35 models with a range of 100 to 600 tons operating pressure. Open ends for handling long materials. High grade steel construction. Easy to operate. Completely equipped with Rodgers pump units, double-acting cylinder rams and controls for a wide range of assembly and disassembly operations.

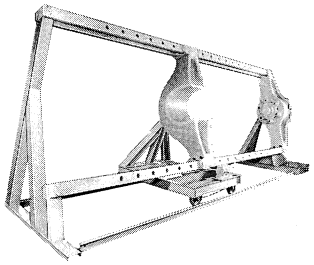

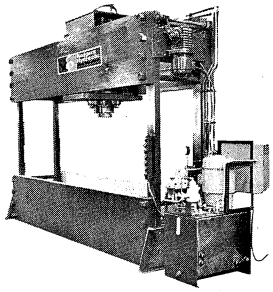

Straightening Shop Press

Designed for straightening railroad boxcar doors, this press is also ideal for straightening large plates and steel castings. Features include electric motor-driven right/left workhead adjustment, Rodgers pumping unit and double-acting cylinder. Choice of two models: 150 or 300 ton capacity.

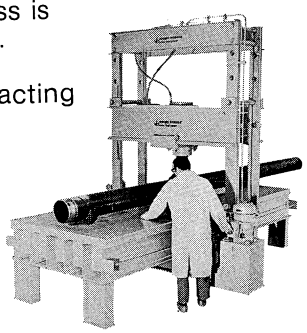

Traveling Frame Shop Press

Designed for straightening rods, plates, castings and weldments. Heavy materials remain on table. Frame and ram move to point requiring pressure. Double-acting cylinder is mounted on rollers for easy right/left positioning, and locks into place for pressing only. Four sizes: 100, 150, 200 and 300 ton capacities.

gfp

Granite Fluid Power
Granite Falls, MN 56241
Phone (320) 564-9009
Fax (320) 564-9029
www.gfpmt.com
gfpinc@kilowatt.net